CAB4 - Battery Enclosure

Enclosure Dimensions:
5.625”H x 7”W x 4.5”D

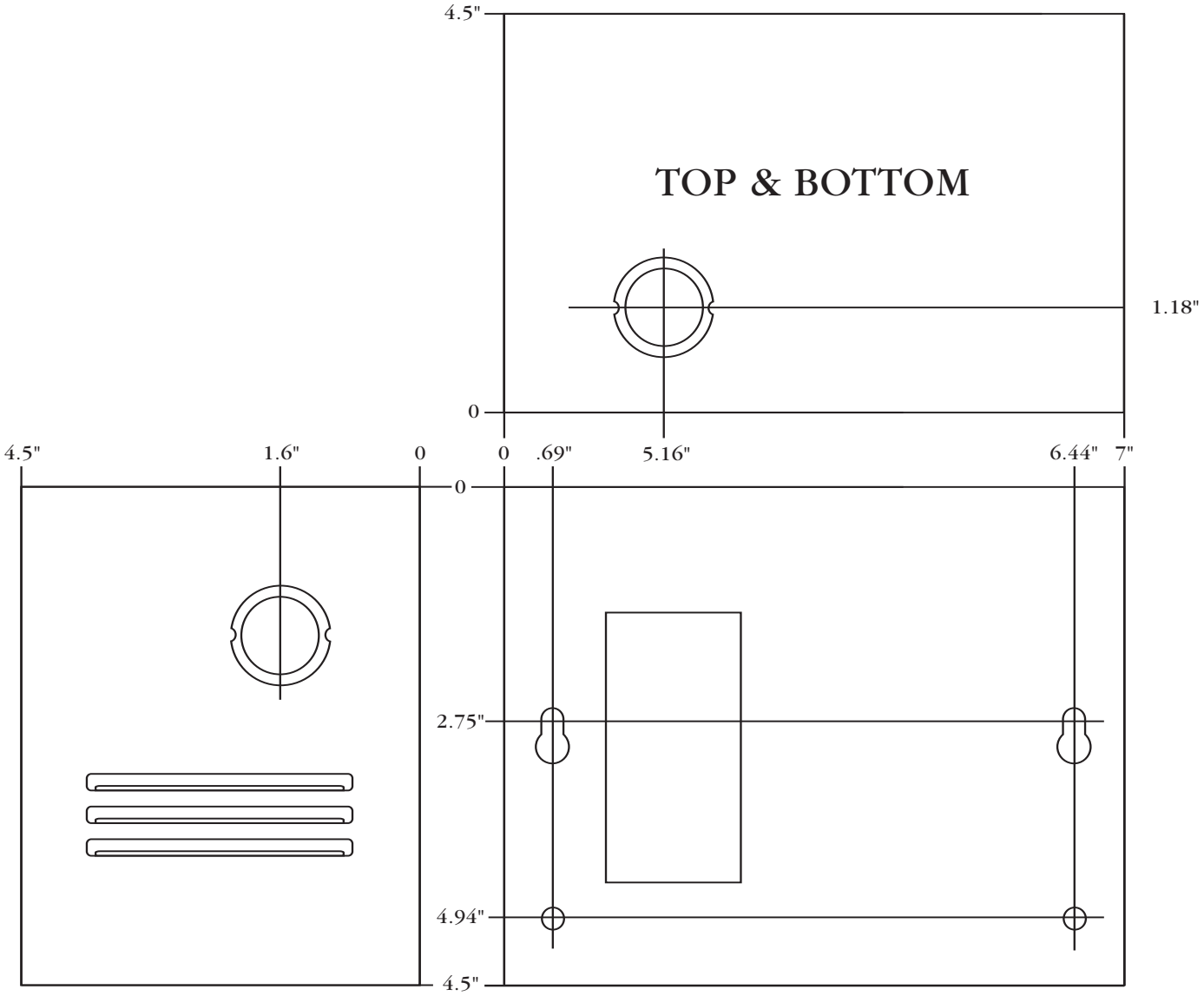

Altronix is not responsible for any typographical errors. Product specifications are subject to change without notice.

Altronix Corp.
140 58th Street, Brooklyn, New York 11220 USA, 718-567-8181, fax: 718-567-9056
website: www.altronix.com, e-mail: info@altronix.com, Made in U.S.A.
IICAB4 - Rev. 100702 K08D

MEMBER